QUICK GUIDE RS TOWER 52 Safe-Quick® Guardrail

Sijperda verhuur

altrex

Read the manual before use

Working height (WH)
4.2 m / 6.2 m / 8.2 m / 10.2 m / 12.2 m / 14.2 m

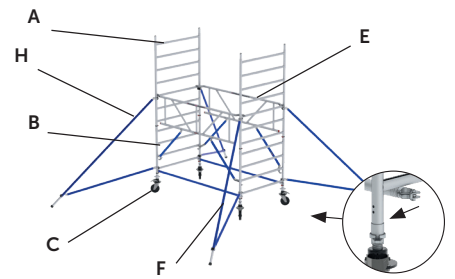

A1

Working height (WH)
3.2 m / 5.2 m / 7.2 m / 9.2 m / 11.2 m / 13.2 m

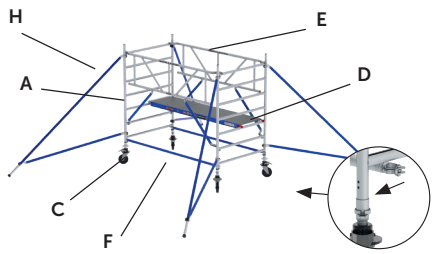

A2

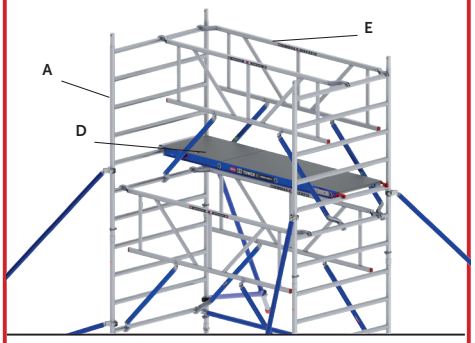

B1

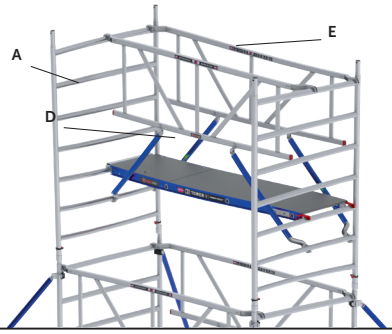

B2

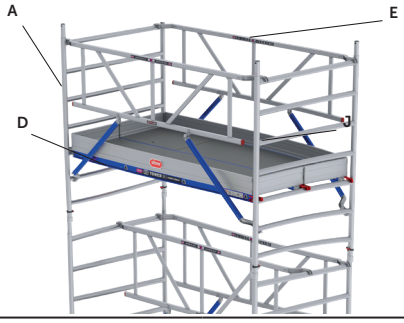

C

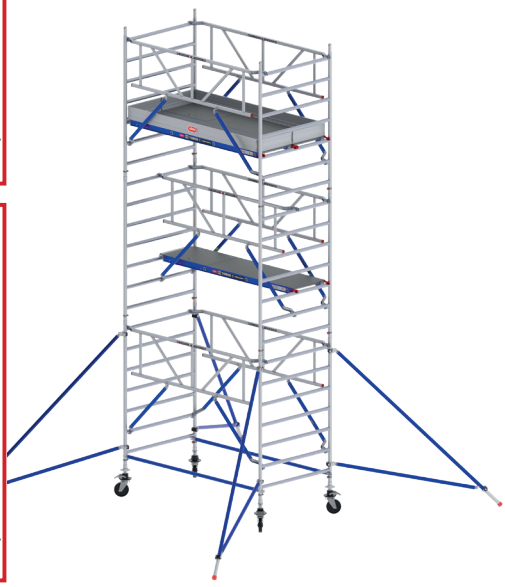

PH	2.20 m	3.20 m	4.20 m	5.20 m	6.20 m	7.20 m	8.20 m	9.20 m	10.20 m	11.20 m	12.20 m
WH	4.20 m	5.20 m	6.20 m	7.20 m	8.20 m	9.20 m	10.20 m	11.20 m	12.20 m	13.20 m	14.20 m
A	2	4	4	6	6	8	8	10	10	12	12
B	2	-	2	-	2	-	2	-	2	-	2
C	4	4	4	4	4	4	4	4	4	4	4
D	2	3	3	3	4	4	5	5	6	6	7
E	4	4	6	6	8	8	10	10	12	12	14
F	2	2	2	2	2	2	2	2	2	2	2
G	-	4	4	4	4	4	4	4	4	4	4
H	1	1	1	1	1	1	1	1	1	1	1

QUICK GUIDE

RS TOWER 52
Safe-Quick® Guardrail

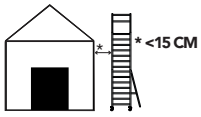

Sijperda verhuur

altrex

Read the manual before use

Working height (WH)
4.2 m / 6.2 m / 8.2 m / 10.2 m / 12.2 m / 14.2 m

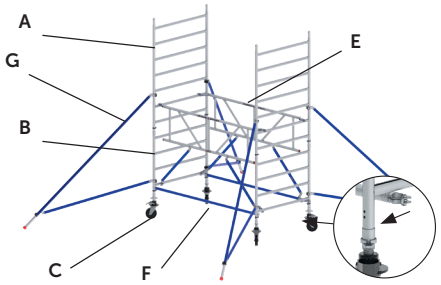

A1

Working height (WH)
3.2 m / 5.2 m / 7.2 m / 9.2 m / 11.2 m / 13.2 m

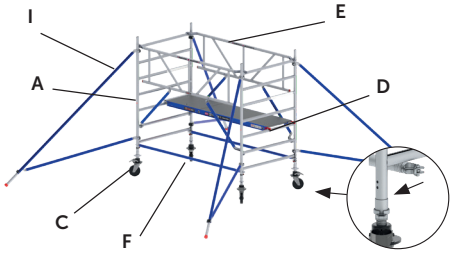

A2

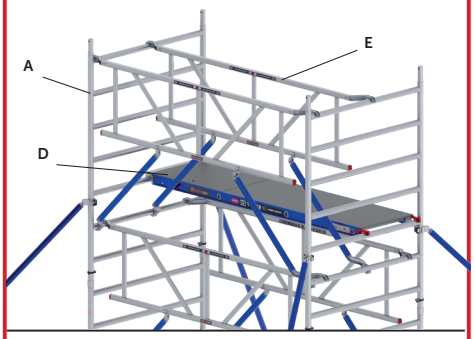

B1

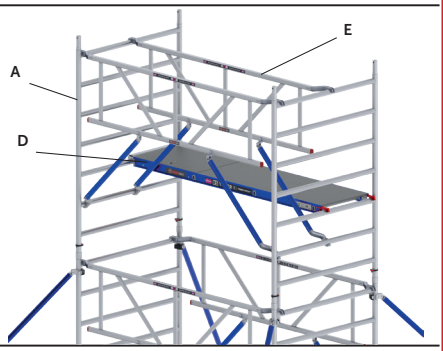

B2

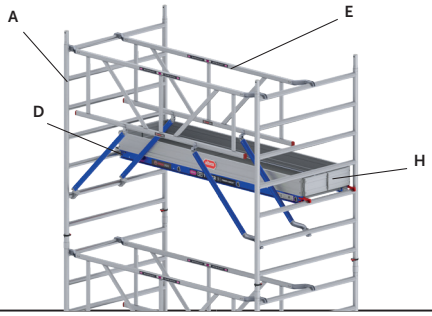

C

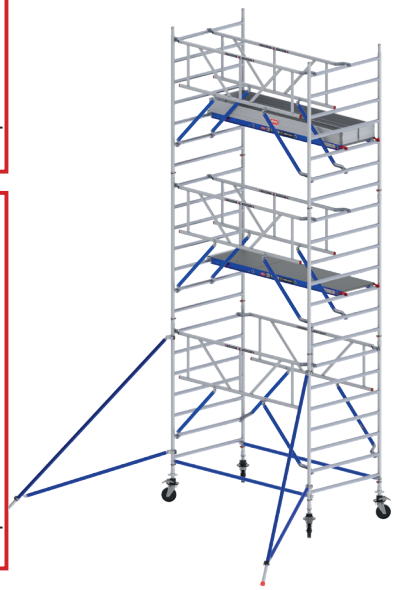

PH	2.20 m	3.20 m	4.20 m	5.20 m	6.20 m	7.20 m	8.20 m	9.20 m	10.20 m	11.20 m	12.20 m
WH	4.20 m	5.20 m	6.20 m	7.20 m	8.20 m	9.20 m	10.20 m	11.20 m	12.20 m	13.20 m	14.20 m
A	2	4	4	6	6	8	8	10	10	12	12
B	2	-	2	-	2	-	2	-	2	-	2
C	4	4	4	4	4	4	4	4	4	4	4
D	1	2	2	2	3	3	4	4	5	5	6
E	4	4	6	6	8	8	10	10	12	12	14
F	2	2	2	2	2	2	2	2	2	2	2
G	-	2	2	2	2	2	2	2	2	2	2
H	1	1	1	1	1	1	1	1	1	1	1